Design Process Planning and Management

LAB EX-08: 3D Printing

Dr. K. Anandavel
Anandavel.k@vit.ac.in
anandavelvit@gmail.com

Room: 313-A43, SJT

Name: SUJAL SRIVASTAVA
Reg. No.: 20BME0699

EX08: 3D Printing

Target Date: 11.59 PM on 29 Mar '21

AIM

Develop a 3D printing slicing process parameter plan and generate tool path for the given job shown in the fig.1.

Tool: Fusion 360

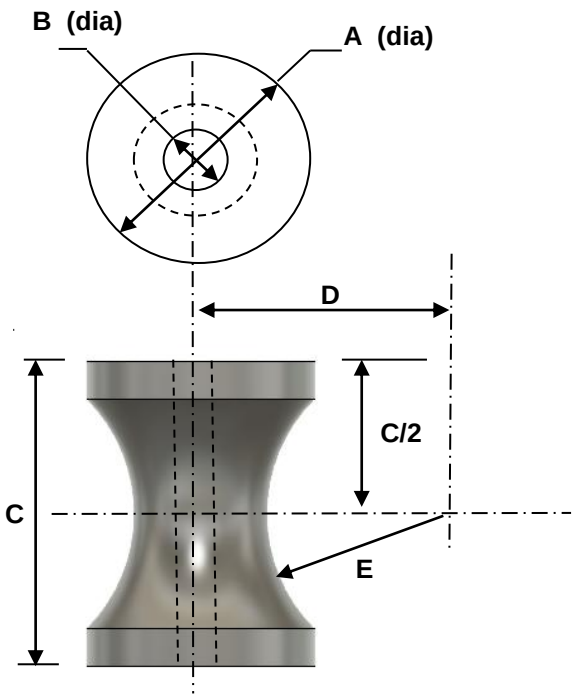

Parameter	Details	Remarks
A	30	Dia
B	8 mm	Dia
C	80 mm	-
D	43.5	
E	76	Dia

Please email to anandavel.k@vit.ac.in for any clarification or missing data or suggestion

EX08: 3D Printing

Procedure

1. Create geometric model of finished size (Fusion 360) to the given dimensions in Fig.1
2. Save model EX06_ Roll No_GM
3. Complete the set up with Additive manufacturing.
4. Select the appropriate machine and appropriate technology
5. Select and define 3D printing process parameter
6. Complete the setup
7. Simulate and visualize the slicing process to ensure to optimise the time.
8. Save the model with EX08_ Roll No_MM
9. Post-process and save the code.
10. Save the manufacturing model
11. Complete the experiment report(coding)
12. Upload the report, programme files and set up sheet in MOODLE folder under EX08
13. Upload the same in VTOP

EX08: 3D Printing

Table 1: Selection of Machine and process parameter

Machine Technology: Fused filament fabrication (FFF)

Parameters:

1. Machine used: Alfawise U20
2. Material: ABS 1.75mm
3. Layer height: 0.15 mm
4. All other spacing parameters were kept as default.

EX08: 3D Printing

Fig. 1: At 25% of height

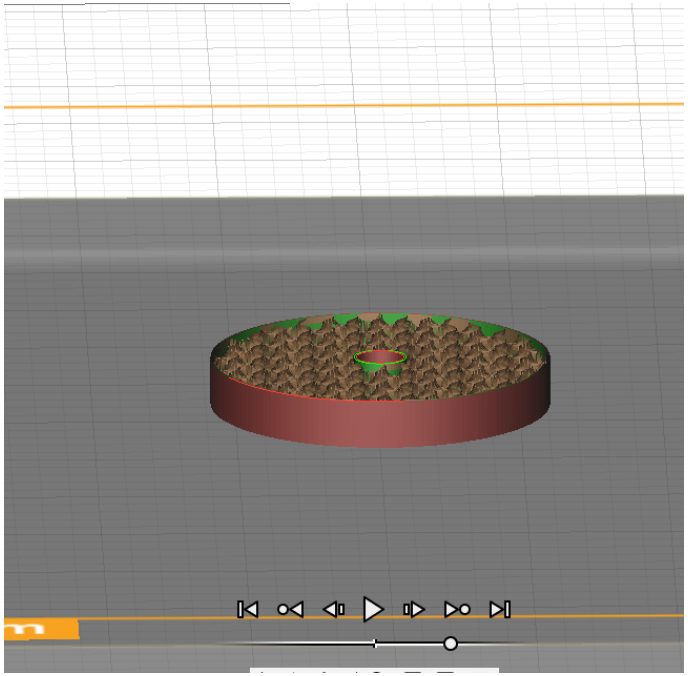

View 1

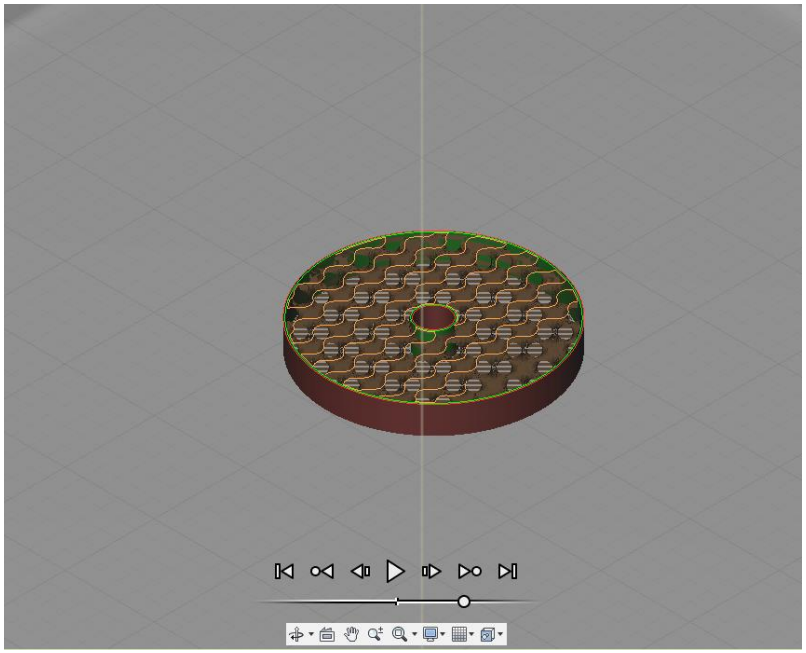

View 2

Fig. 2: At 50 % of height

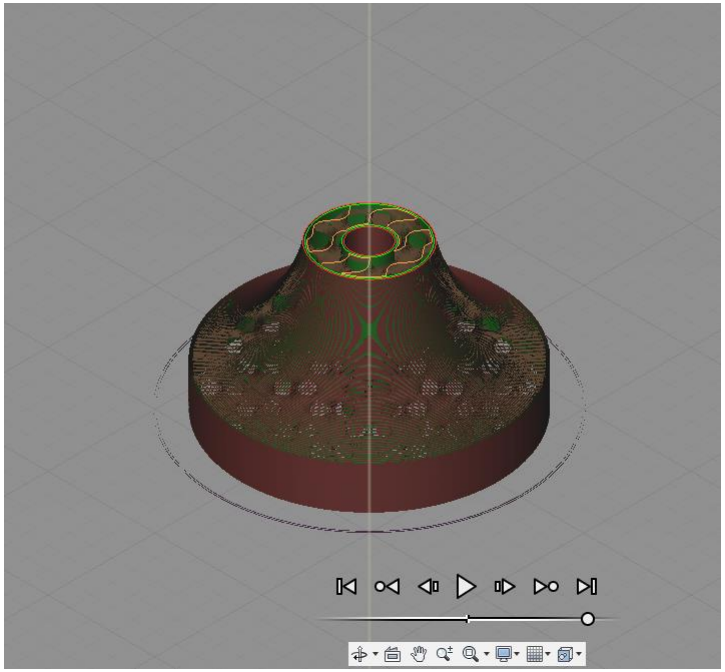

View 1

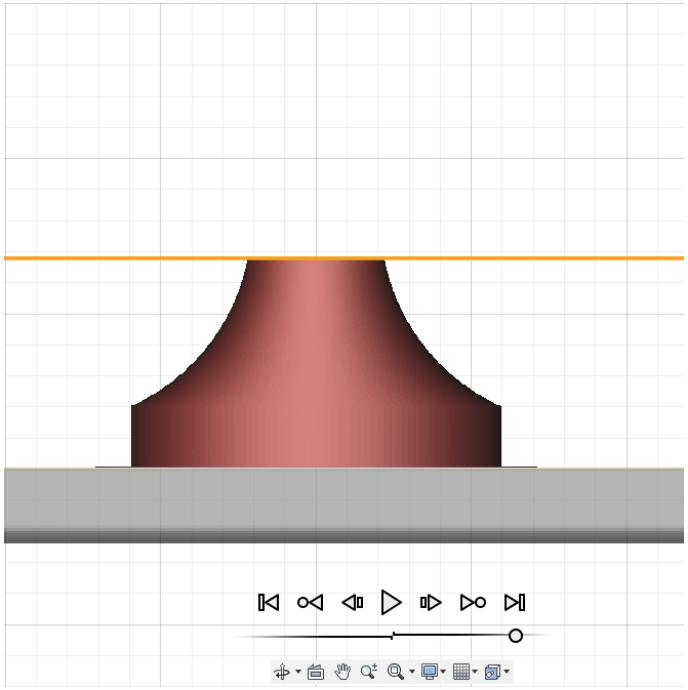

View 2

Fig. 3: At 75 % of height

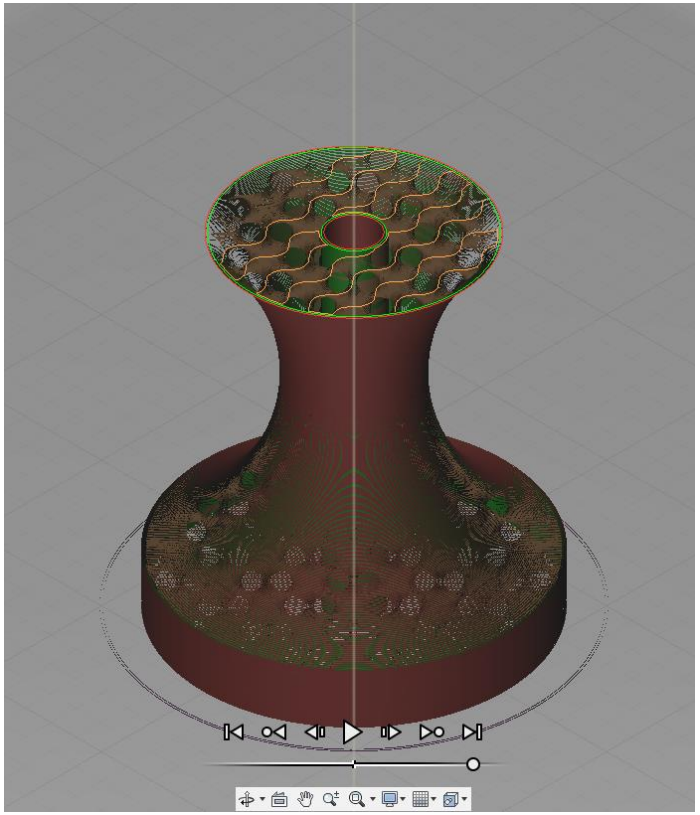

View 1

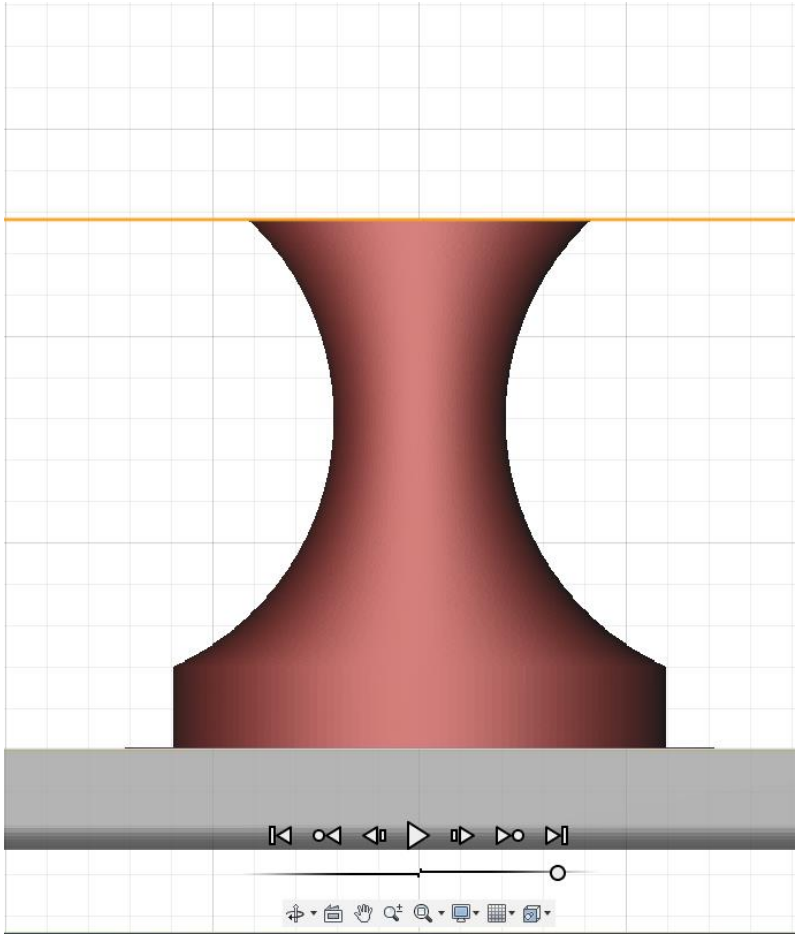

View 2

Fig. 4: At 100 % of height

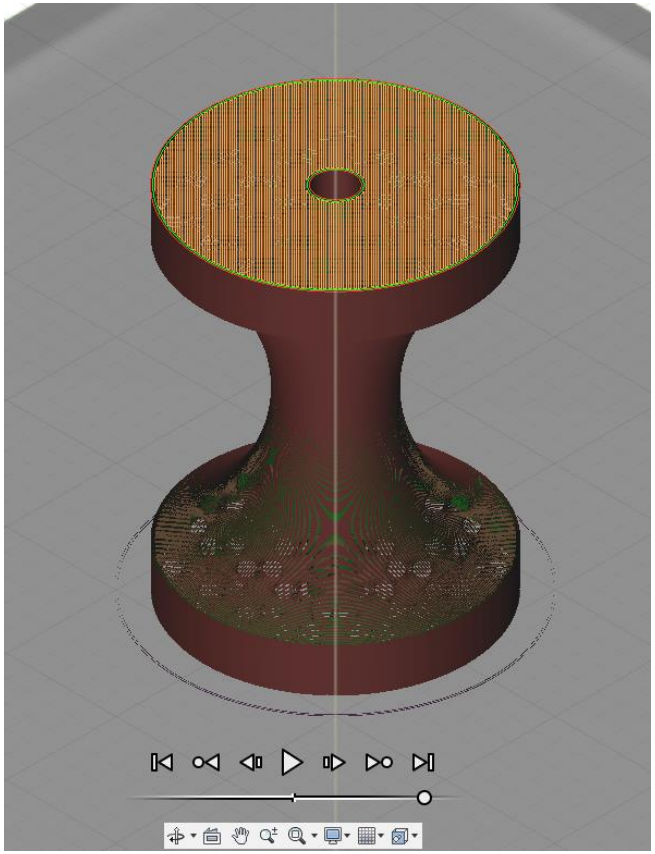

View 1

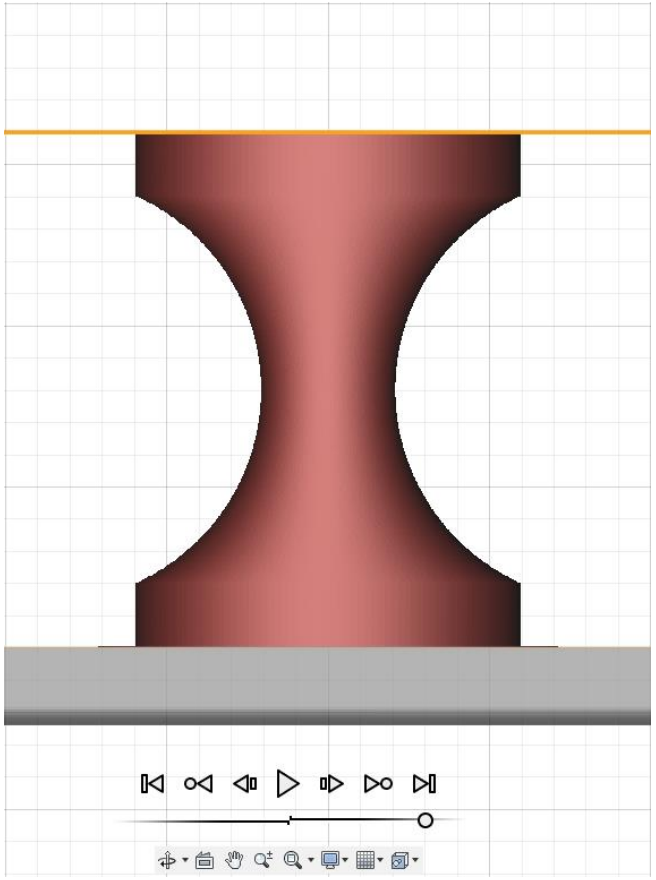

View 2

Inference and Conclusion

The material was printed as desired. The print time can be reduced by using a different material and also by increasing the layer height.

Total time taken: 03:06:22